WE PROMISE | WE DELIVER

NOBLELIFT
CANADA

PTE 15-20N EDGE ELITE

Lithium Powered Pallet Jack
Capacity 1500-2000KG - 3300-4500lbs

Lithium Battery

CAN-bus
CAN-bus

High Performance

Easy Maintenance

Highly Cost Effective

CSA UL

The EDGE Elite - PTE15-20N

The EDGE Elite PTE15-20N Lithium pallet jacks are economical, quiet, low maintenance, and ultra-smooth, making them perfect for light to medium-duty material handling. Their compact design, low service weight, and small turning radius make them ideal for loading docks, delivery operations, narrow aisles, and confined spaces such as retail stores, business centers, elevators, trailers, containers, and mezzanine warehouses.

Highlights

- American Curtis Travel Controller with CAN-bus control
- Brushless DC permanent magnetic drive motor
- Lithium battery: 24V/20Ah / 48V/20Ah
- Built-in charger & Fast charging in 2 hours
- Battery heating system (PTE20N)
- Smart handle with keyless pin-code panel, RFID card (PTE20N), & LCD display with battery indicator and hour meter
- Electric lifting and lowering buttons
- Travel speed: 4.8 km/h (unloaded), 4.5 km/h (loaded)

Ergonomic and Smart Tiller Design

The next-generation tiller head features soft grips for a comfortable and ergonomic experience. Its larger buttons ensure easy operation, even when wearing gloves.

Pressing the Turtle button allows the truck to operate with the handle in an upright position (pinwheel capability), ensuring safe and efficient maneuvering in tight spaces like elevators, trailers, and containers.

Dual butterfly-style thumb controls provide effortless travel, while automatic speed reduction during turns helps prevent product damage.

With a lightweight design of just 280 lbs (PTE15N) / 337 lbs (PTE20N), these pallet jacks are perfect for delivery trucks with tail lift platforms, ensuring efficient distribution without compromising payload capacity. Their ultra-compact body is even shorter than a traditional hand pallet jack, making the EDGE Elite ideal for tight spaces and maneuverability.

The durable, shock-absorbing polyurethane traction wheel delivers exceptional grip and longevity.

The EDGE Elite is enclosed in a stamped steel frame, offering protection for both its components and the operator's feet during operation.

The innovative fork design ensures smooth entry and exit from pallets, while double-sided C-shape reinforcement enhances the frame's strength and durability.

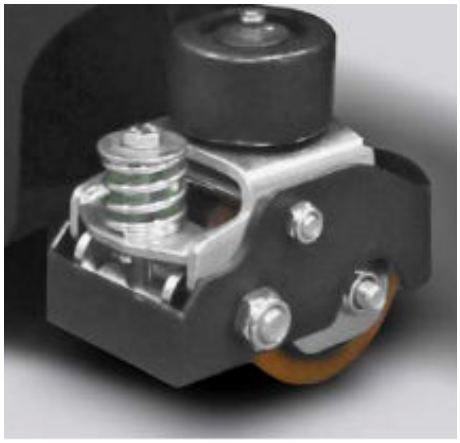

Suspension casters improve stability and provide a smooth transportation experience.

With a capacity of up to 4,500 lbs (2000kg) and the ability to tackle ramps of up to 4/16% (laden/unladen), the EDGE Elite is perfect for loading docks and delivery operations.

The intelligent design enables quick and effortless one-handed battery exchange in seconds.

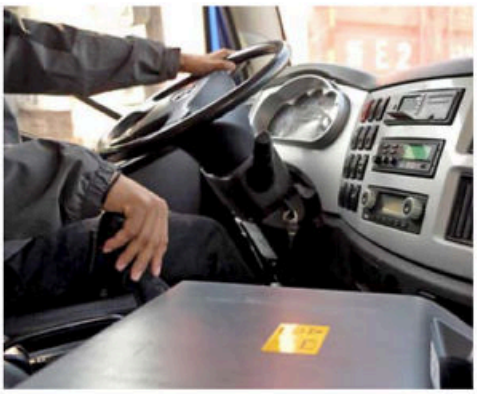

The battery case features a built-in socket for convenient mobile charging on the go.

The battery supports external recharging with an optional external charger. An optional backrest is available in 42”, 48”, and 60” sizes.

The intelligent design enables quick and effortless one-handed battery exchange in seconds.

Optional Charging Hub

- Capable of charging up to five batteries simultaneously.
- LED screen provides real-time charging status for each battery.
- Integrated alarm system with automatic fire extinguishers at each charging point for enhanced safety.
- Expandable design allows multiple hubs to be installed side by side for large fleet operations.

Designed for Operator Comfort and Control

Noblelift utilizes lithium-ion phosphate batteries, known for their exceptional longevity and safety. These lithium-iron batteries feature a Battery Management System (BMS), a thermal management system, and an automotive-grade DC high-voltage control system. The BMS monitors charging and discharging data, ensuring safety throughout the battery’s lifecycle.

*The PTE15N-20N Edge Elite electric palle trucks have a **2-year** or **4,000 hours warranty** on the lithium-ion battery cells.*

Advantages of Lithium-ion Power

Effortless Charging for Continuous Operation

The fast-charging, maintenance-free lithium battery reaches a full charge in just 2 hours. It supports opportunity charging during breaks and shift changes, enabling the truck to operate seamlessly through multi-shift schedules without the need for battery replacements.

With lithium-ion technology, you gain a cleaner, more efficient energy solution that lasts longer and charges faster—all while eliminating maintenance costs. It's the smart, reliable choice for businesses looking to streamline operations and minimize disruptions.

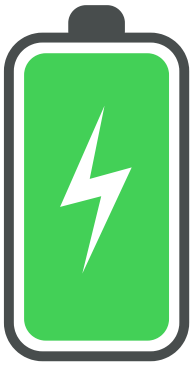

CAN-bus

Easy Maintenance

Easy and quick access to all components—no special tools needed. The hoseless hydraulic lifting circuit enhances reliability, while the tiller display tracks working hours to support regular maintenance.

Identification				
1.1	Manufacturer		**Noblelift**	
1.2	Model		**PTE15N**	**PTE20N**
1.3	Drive		Lithium Electric	
1.4	Type of Operation		Pedestrian	
1.5	Load capacity / rated load	Q lb(kg)	3300 (1500)	4500 (2000)
1.6	Load center distance	c in(mm)	24 (500)	
1.8	Load distance	x in	37.3	37.4
1.9	Wheel base	y in	46.7	46.8
Weights				
2.1	Service weight included battery (see line 6.5)	lb (kg)	280	337
2.2	Axle loading, laden front / rear	lb (kg)	1380/2209	1378/3369
2.3	Axle loading, unladen front / rear	lb (kg)	218/64	119/34
Wheels, Chassis				
3.1	Tires		Polyurethane (PU)	
3.2	Tire size, front	xw (in)	8.3 x 2.8	
3.3	Tire size, rear	xw (in)	3.2 x 2.8 (3.2 x 3.7)	
3.4	Additional wheels (dimensions)	xw (in)	3.2 x 1.2	
3.5	Wheels, number front / rear (x=driven wheels)		1x+2/2(1x+2/4)	
3.6	Track width, front	b10 (in/mm)	-/16.9	
3.7	Track width, rear	b11 (in/mm)	21	
Basic Dimensions				
4.4	Lift	α/β(o)	4.5	
4.9	Height of tiller min/max	h1 (in/mm)	28/46	
4.15	Height, lowered	h2 (in/mm)	2.95	
4.19	Overall length	L1 (in)	60.5	61
4.20	Length to face of forks	L2 (in/mm)	15.3	15.5
4.21	Overall width	b1 (in/mm)	21/ 27	
4.22	Fork dimensions	s/e/l (in/mm)	2 / 6.3 / 45	
4.25	Width across forks	b5 (in/mm)	21/ 27	
4.32	Ground clearance, center of wheelbase	m2 (in/mm)	1.2	
4.34	Right angle stack with 32x48 pallet	Ast (in/mm)	75	
4.35	Turning radius	Wa (in/mm)	53	
Performance Data				
5.1	Travel speed, laden/unladen	mph	2.6/2.9	3/3.2
5.2	Lift speed, laden/unladen	in/s	.8/1	.7/.9
5.3	Lowering speed, laden/unladen	in/s	2/1.6	2/1.2
5.7	Max gradient performance, laden/unladen S2 5min	%	6/16	8/16
5.10	Service brake		Electromagnetic	
E-Motor				
6.1	Drive motor rating S2 60min	hp	0.87	1.34
6.2	Lift motor rating at S3 15%	hp	0.67	1.07
6.3	Battery acc. to Din 43531/35/36 A,B,C			
6.4	Battery voltage, nominal capacity K5	V/ah	24V/20Ah	48/20Ah
6.5	Battery weight	lb	12(18.7)	18.7
6.6	Charger standard	hp*h	0.18	0.25
Other Details				
8.1	Type of drive control		DC-Speed control	

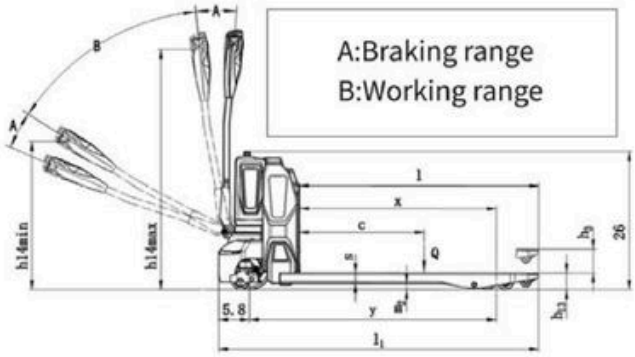

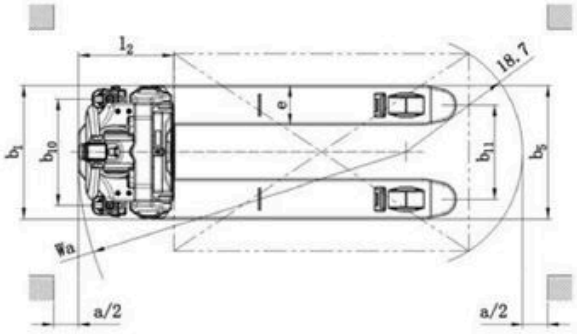

Authorized Dealer

NOBLELIFT
CANADA